POLE P409-CC

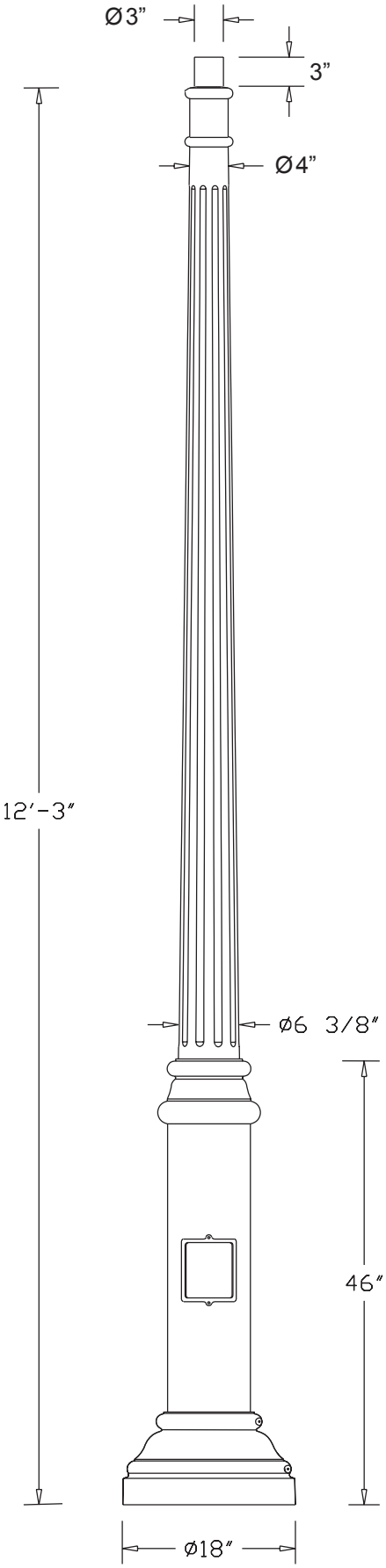

DESCRIPTION

The pole shall consist of a clam-shell base cover and a shaft. The base cover shall be made from a two-piece casting secured to the pole shaft with four s/s tamper resistant screws and shall be round in shape. The castings shall be of uniform wall thickness with no warping or mold shifting and shall be formed true to the original pattern with complete detail. The aluminum shaft shall be made of cast aluminum with 10 flutes and shall be circumferentially welded to an 8-5/8”OD aluminum extrusion. A cast aluminum donut shall cover the weld.

DIMENSIONS

The pole shall be 12’-3” in height. The base shall be 18” in diameter.

MOUNTING

The pole shall be supplied with a sturdy steel template and with 4 hot dipped galvanized 3/4” x 24” long “L” type anchor bolts with two nuts and two washers each. These will install on an 11-1/2” bolt circle with anchor bolts extending 3” above the ground level. An optional 3”H x 4”OD tenon is available for fixture mounting. Custom tenon sizes may be available. A 5”W x 6”H service door shall be located at 24” to center from the bottom of pole.

FINISH

All applicable parts shall receive a standard electrostatically applied thermoset polyester powder coat smooth semi gloss finish with a four part corrosion inhibiting process.

CONTACT INFORMATION

HCI Heritage Casting & Ironworks

(800) 267-3175 (905) 238-2648
1280 Fewster Drive Mississauga Ontario L4W 1A4 Canada
Fax (905) 238-9060
Email sales@hcilighting.com
WEB www.hcilighting.com

COLOR AND OPTIONS

There are five standard RAL colors to choose from: Black 9011, Green 6005, Bronze 8019, Grey 7012 and White 9016. Custom colors are available for an upcharge. A variety of options is available. For more information please see the *Finishes* and *Options* sections.

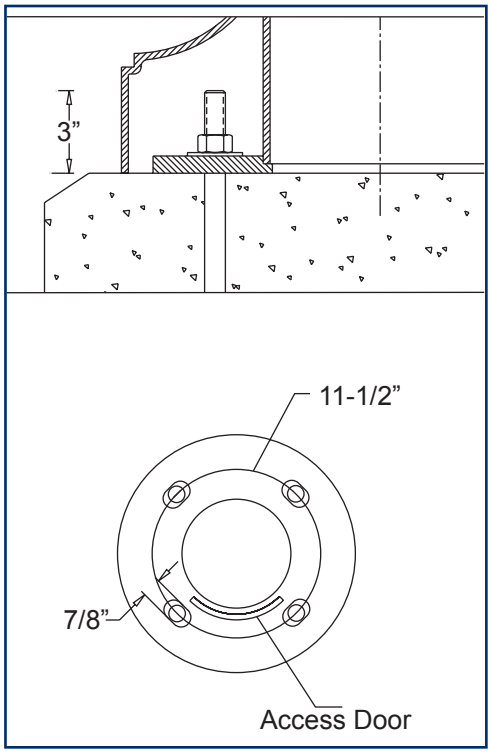

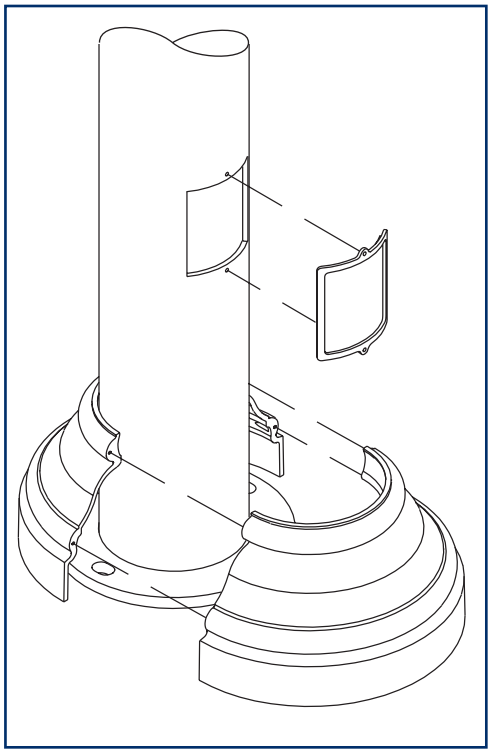

EPA INFORMATION

Model number	Height (ft)	Wall thickness (in)	Diameter (in)	EPA rating 80 mph (sq.ft)	90 mph (sq.ft)	100 mph (sq.ft)
P409-CC	12.25	0.325	4 - 6 3/8”	30.36	24.29	19.77

HCI, Ltd. neither designs nor recommends concrete footing size

OPTIONS

- **SRT** single receptacle ❑
- **DRT** double receptacle ❑
- **GFI** GFI receptacle ❑
- **BA1-BM** single bolt-on 24”L banner arm ❑
- **BA1-CM** single clamp-on 24”L banner arm ❑
- **BA1H-BM** single bolt-on 24”L banner arm with hog ring ❑
- **BA1H-CM** single clamp-on 24”L banner arm with hog ring ❑
- **BA1-BBM** single bolt-on break-away 24”L banner arm ❑
- **BA1H-BBM** single bolt-on break-away 24”L banner arm with hog ring ❑
- **SS1-CM** single clamp-on street sign ❑

Ordering Sequence Example:

Luminaire	Fitter	Diffuser	Light Source	Voltage	Optical System	Arm	Configuration	Pole	Finish	Options
F100-L	B4	FPC	150HPS	120V	LV-L5	A307	2A	P409-CC	RAL9011	SRT

© 2002 HCI VER. 6 Illustrations are copyrighted. Unauthorized reproduction is prohibited. Specifications are subject to change without notice.